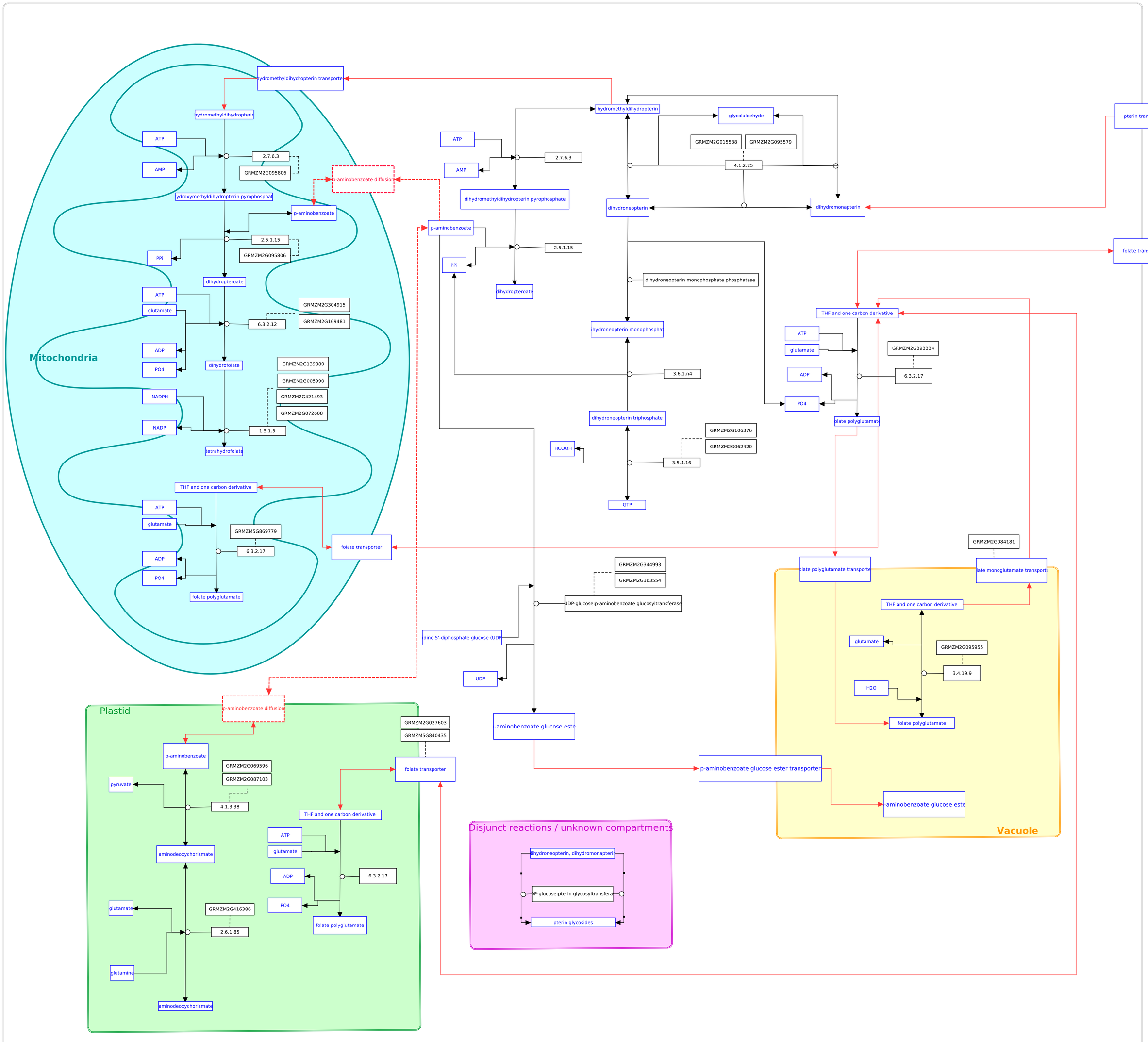Title: Vitamin B9 (folate) biosynthesis [1, 2]
Organism: Zea mays